MAD Ear+ Headphone Amplifier

Basic Version

© Copyright Lloyd Peppard 2003
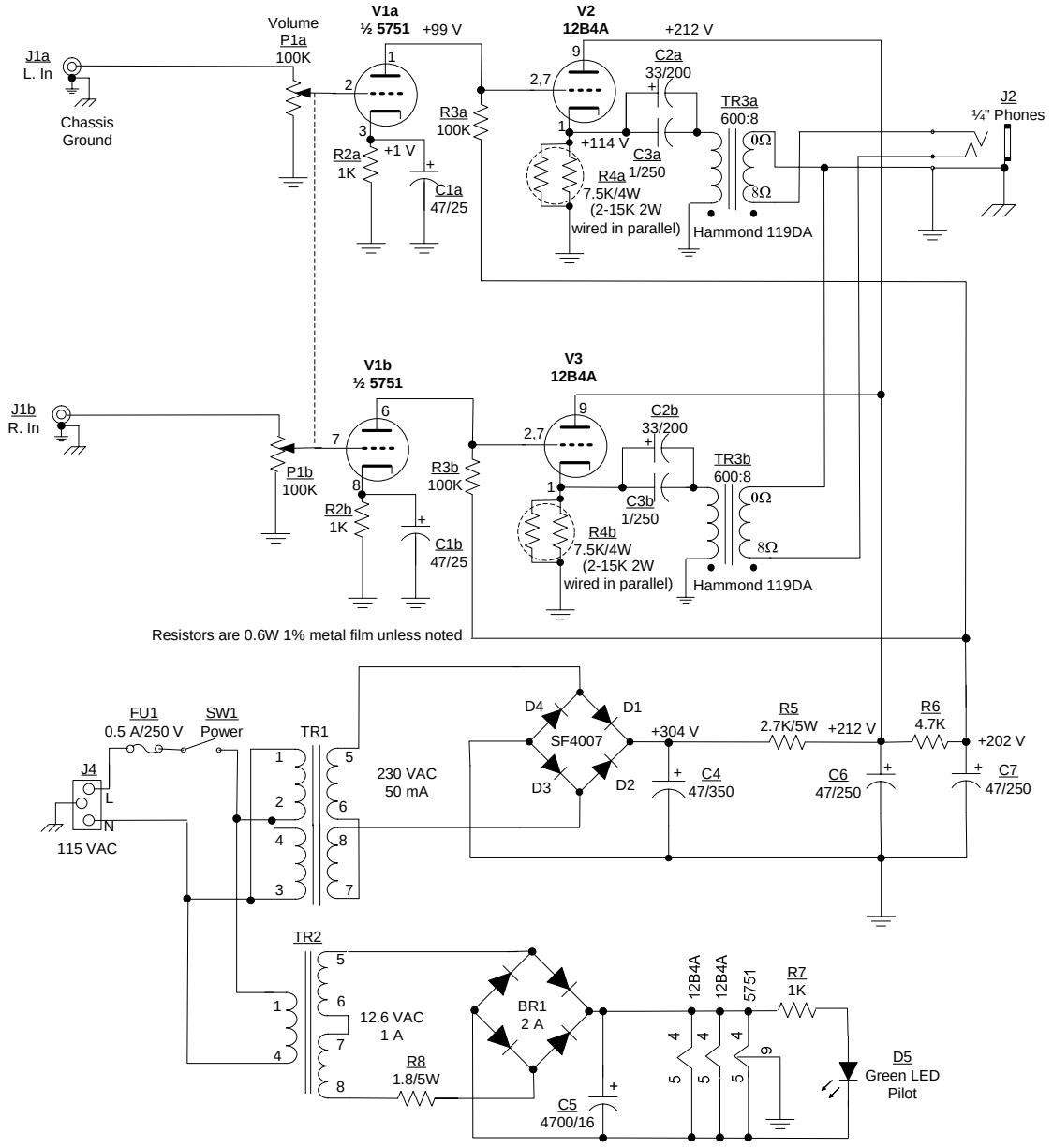
Rev. Apr. 24/03